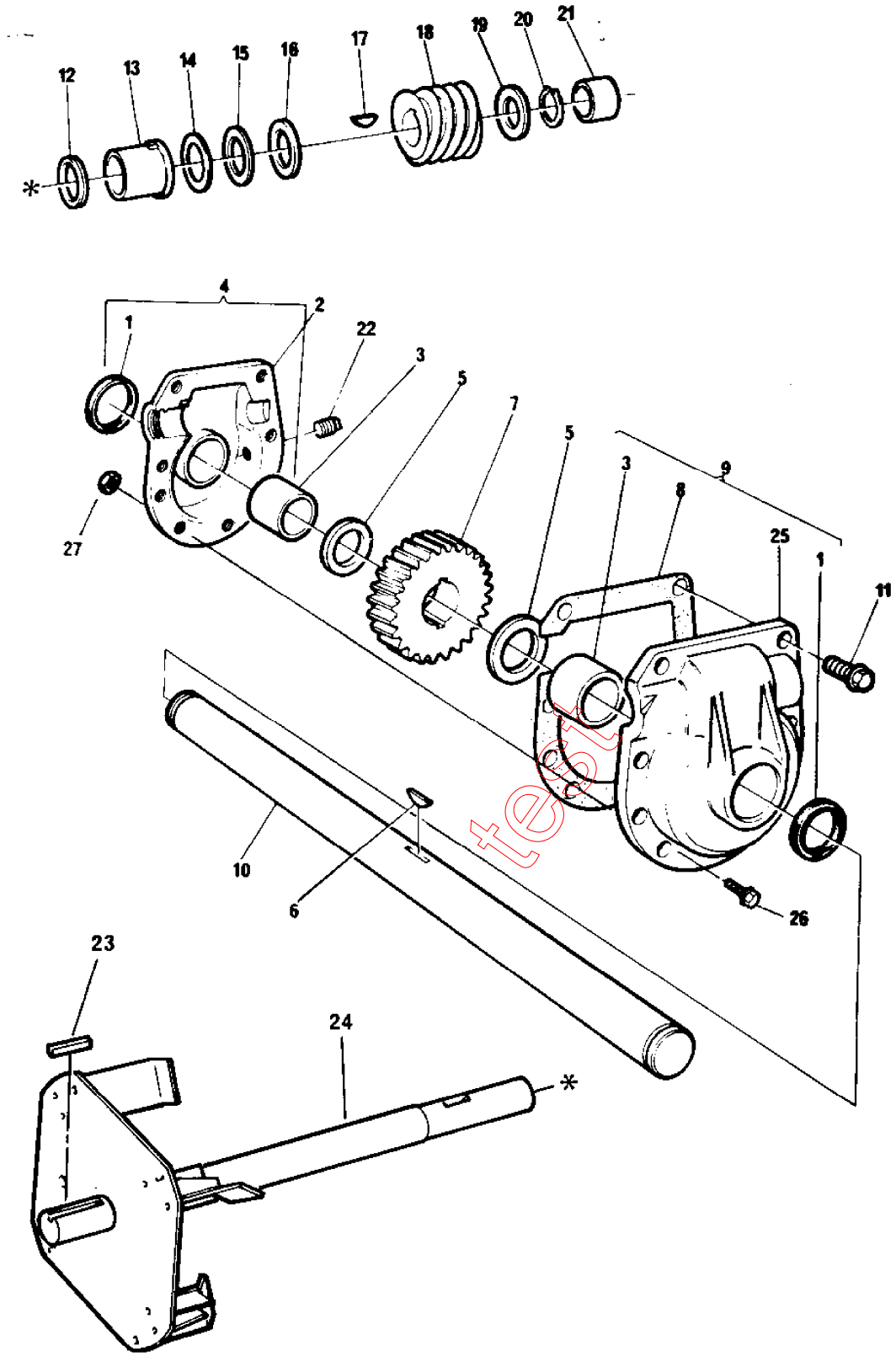

STIGA
130A
SPARE PARTS

Section: 523, 725T, 825, 825T AUGER GEAR BOX

Pos.	Quantity 1813	1815	1814 1816	Spare part No	Description	Kit	Notes	New
0		1	1	1812-0539-01	Gear box assy			
0	1			1812-0537-01	Gear box assy			
1	2	2	2	1812-0344-01	..Ring			
2	1	1	1	1812-0227-01	..Gear case-LH			
3	2	2	2	1812-0343-01	..Bearing			
4	1	1	1	1812-0227-01	.Gear case-LH		Inkl.pos 1,2,3	
5	2	2	2	1812-0345-01	.Washer			
6	1	1	1	1812-0409-01	.Woodruffkey			
7	1	1	1	1812-0335-01	.Worm gear			
8	1	1	1	1812-0226-01	.Gasket			
9	1	1	1	1812-0228-01	.Gear case-RH		Inkl.pos 1,3,25	
10	1			1812-0536-01	.Shaft			
10		1	1	1812-0538-01	.Shaft			
11	1	1	1	9987-5145-12	.Screw			
12	1	1	1	1812-0341-01	.Ring			
13	1	1	1	1812-0925-01	.Bearing impeller s			
14	1	1	1	1812-0339-01	.Washer			
15	1	1	1	1812-0338-01	.Needle bearing			
16	1	1	1	1812-0337-01	.Washer			
17	1	1	1	1812-0307-01	.Key			
18	1	1	1	1812-0336-01	.Gear			
19	1	1	1	1812-0284-01	.Washer			
20	1	1	1	1812-0286-01	.Retainer ring			
21	1	1	1	1812-0297-01	.Bearing			
22	1	1	1	1812-0346-01	.Oil plug			
23	1	1	1	1812-0626-01	.Key			
24	1	1	1	1812-0439-01	.Impeller shaft			
25	1	1	1	1812-0228-01	..Gear case-RH			
26	7	7	7	9987-5125-16	.Screw			
27	8	8	8	9743-5121-02	.Nut			

test